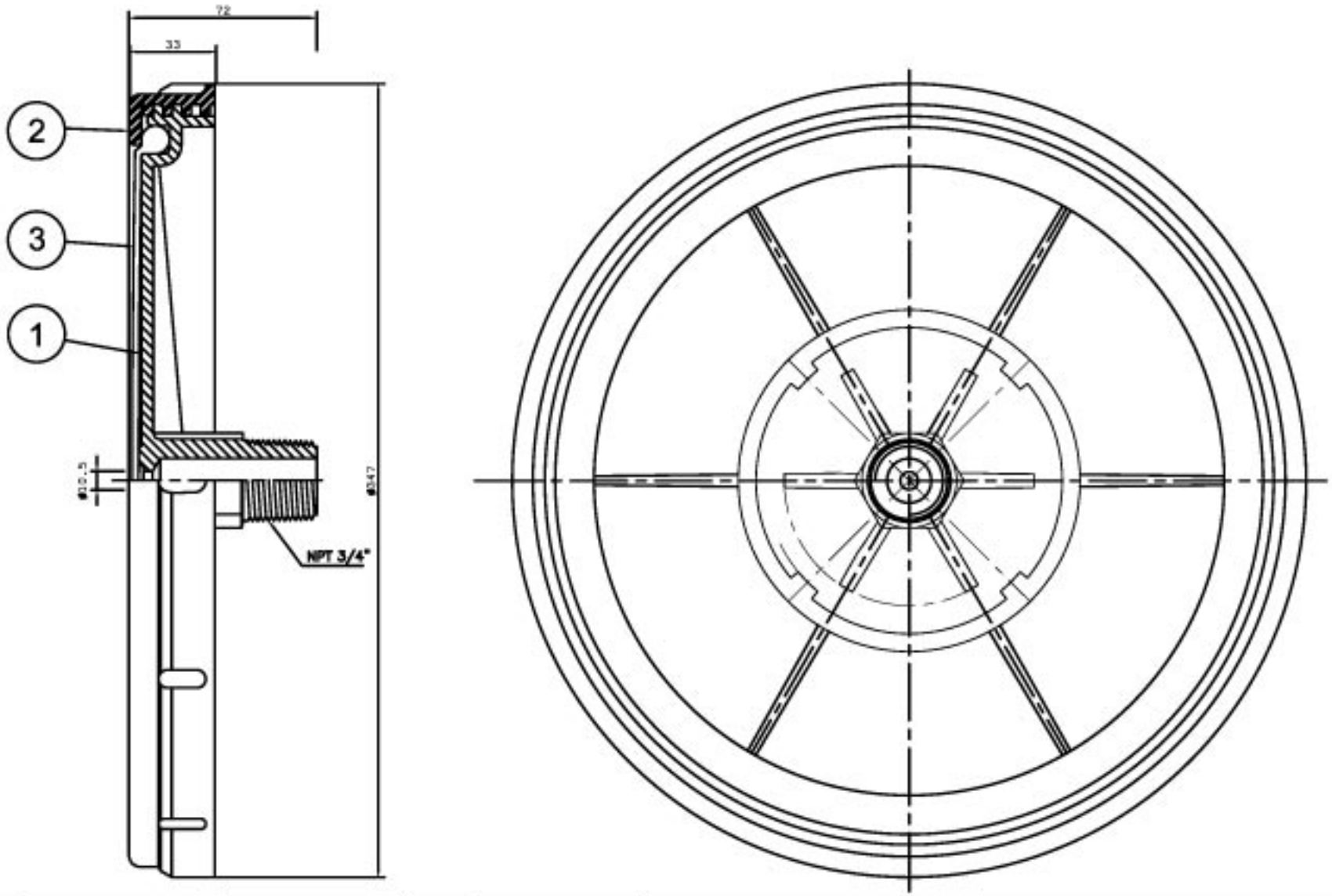

PART No.	PART NAME	MATERIAL	Q'TY	REMARKS
3	MEMBRANE	EPDM	1	12"
2	RETAINING NUT	PP	1	
1	BASE	POLYPROPYLENE	1	

™ 12" DISC DIFFUSER

SCALE : NTS	DATE :	REVISED :	DRAWN BY : SIK
STAMFORD SCIENTIFIC INC.			DWG No. AF 300-A01
			MODEL AF 300