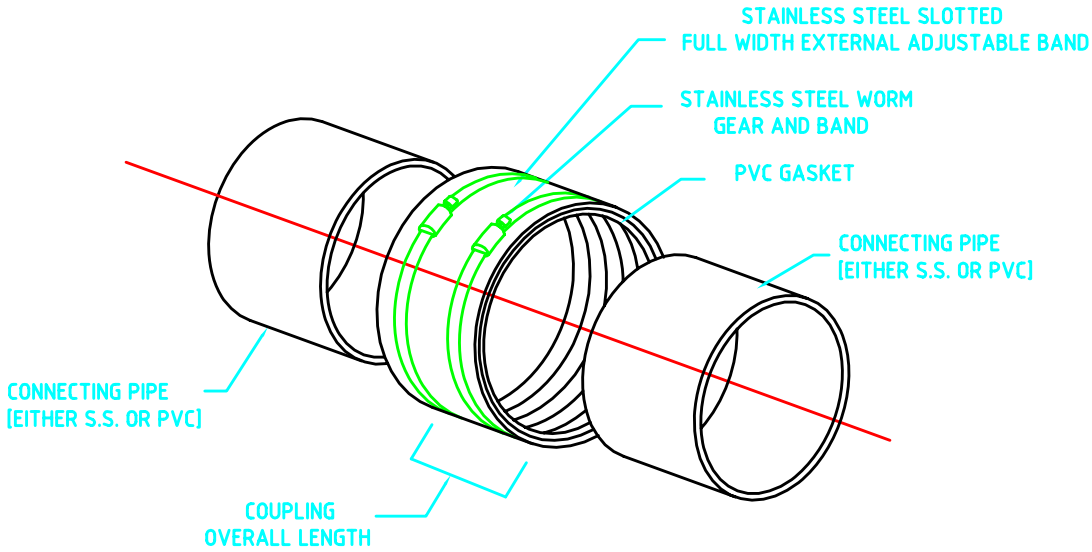

VIEW 1: PRE-INSERTION

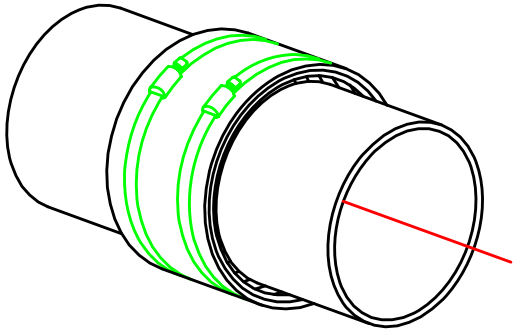

VIEW 2: IN PLACE

NOTES:

SLOTTED EDGES ALLOW FOR MISMATCHED PIPE (DIFFERENCES TO 1/4" DIAMETER WHILE MAINTAINING A STRAIGHT TIGHT JOINT. HOUSING AND CLAMP ARE MADE OF CORROSION RESISTANT 304 STAINLESS STEEL.
COUPLINGS HAVE A ONE-PIECE MOLDED PVC SEALING SLEEVE AND TWO SETS OF SEALING BEADS FOR INCREASED SEAL AREA.

3-5" dia coupling is 4" long

6"-12" dia coupling is 6" long

PART No.	PART NAME	MATERIAL	Q'TY	REMARKS

STAINLESS SLOTTED BAND COUPLING

SCALE : NTS	DATE :	REVISED :	DRAWN BY :

SSI Stamford Scientific International, Inc.

DWG No.	9908104
MODEL	